Rotatable Board-to-Board Connector

Proven Connections – Innovative Solutions

FCI's Rotatable Hermaphroditic BtB connector

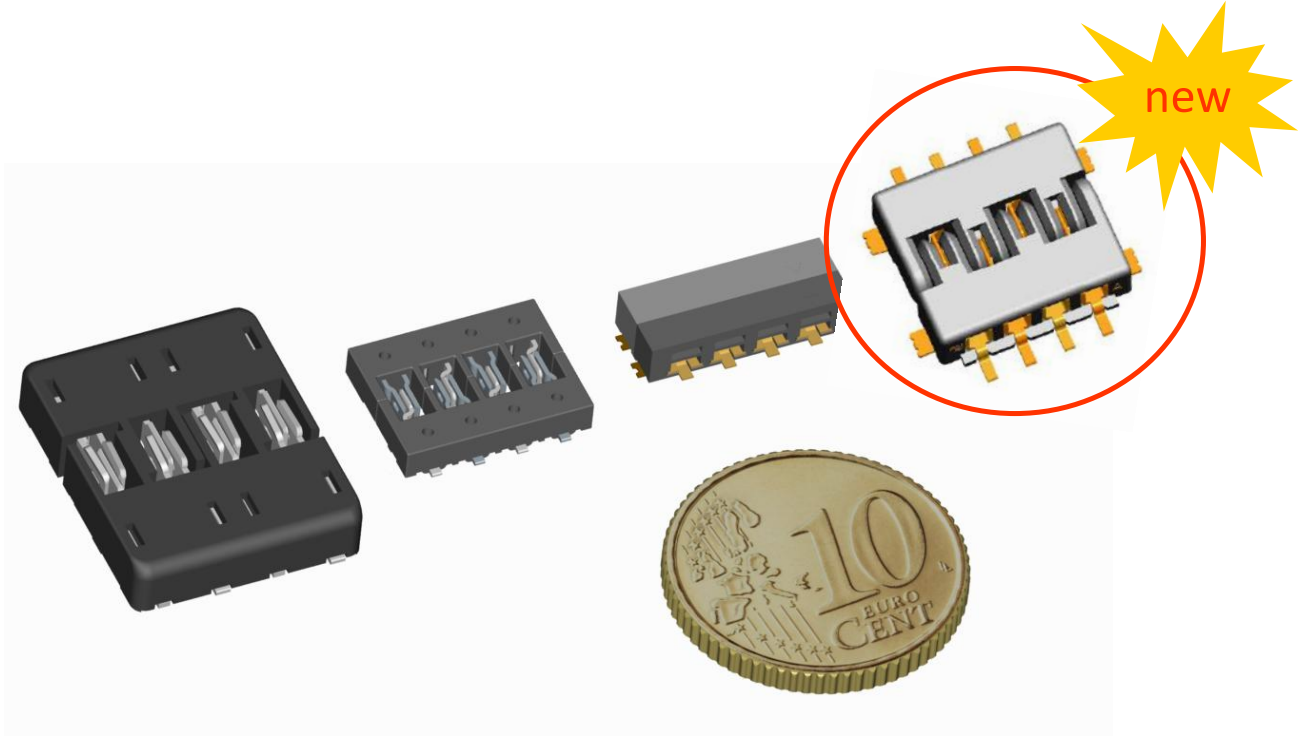

FCI offers many types of BtB interconnect..

Proven Connections
Innovative Solutions

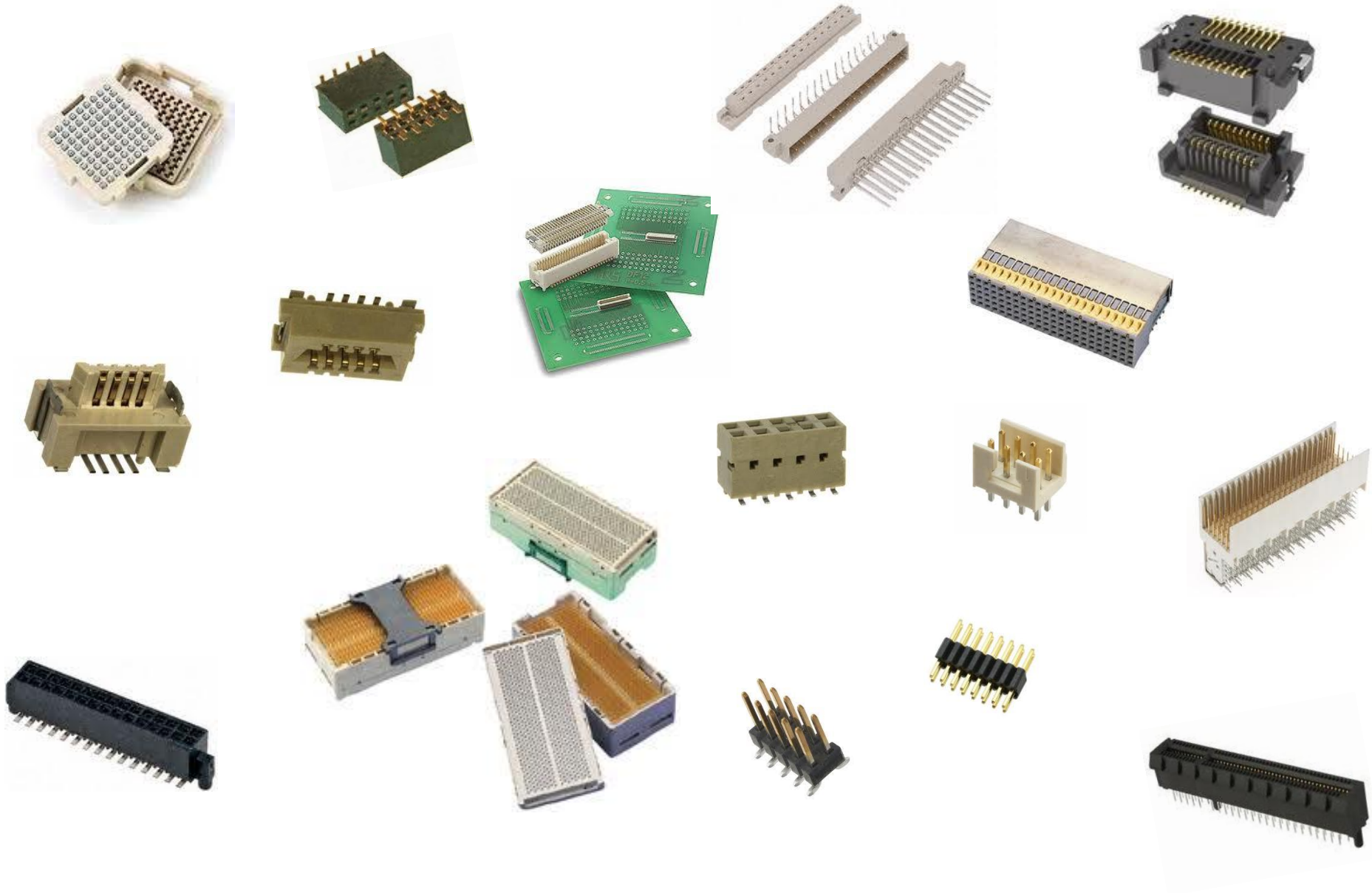

For 4 types of BtB connections…

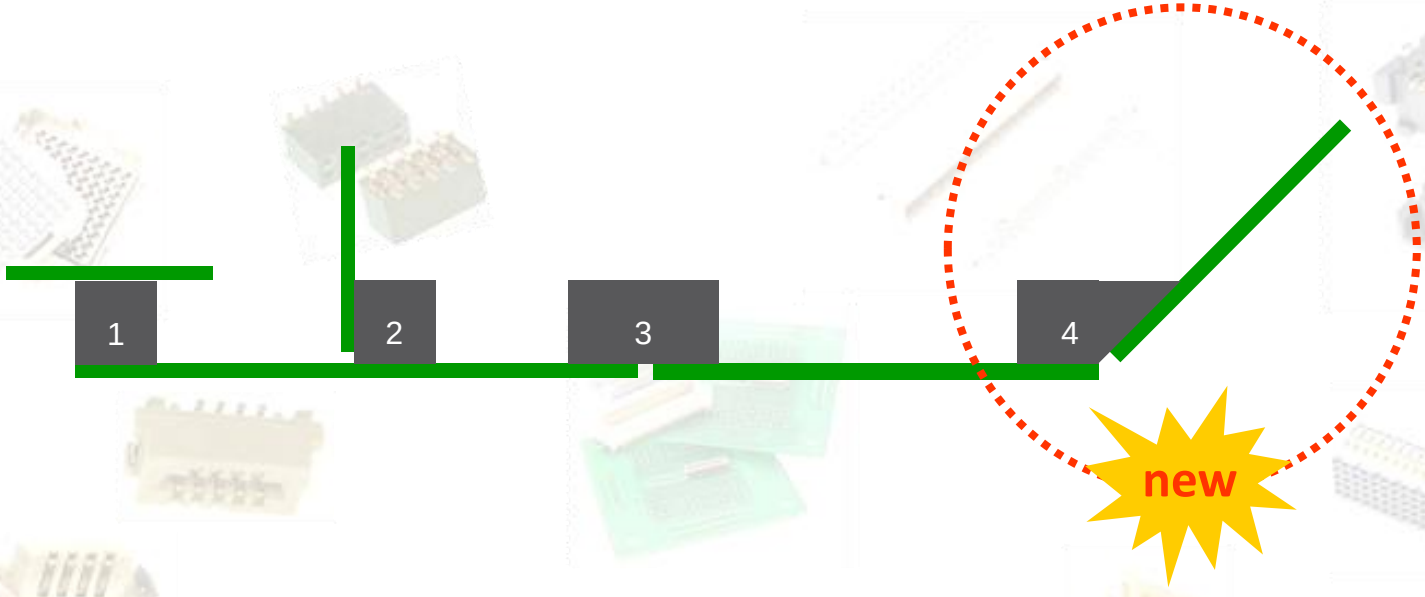

1. Mezzanine
2. Perpendicular
3. Co-planar
4. Angled

ONE new product covers 3 BtB types…

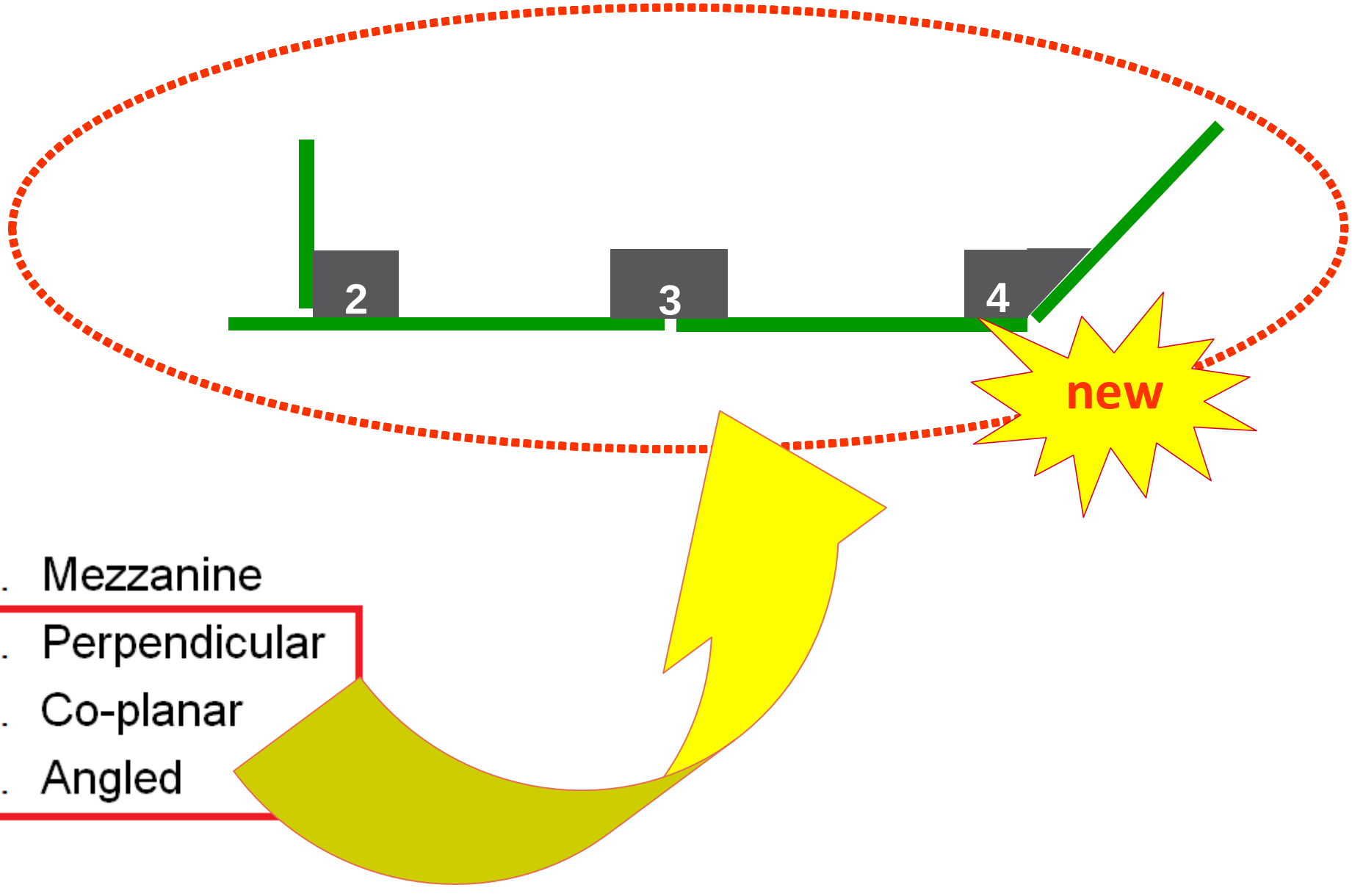

1. Mezzanine
2. Perpendicular
3. Co-planar
4. Angled

ONE new product covers 3 BtB types…

Proven Connections
Innovative Solutions

New!

RotaMax™

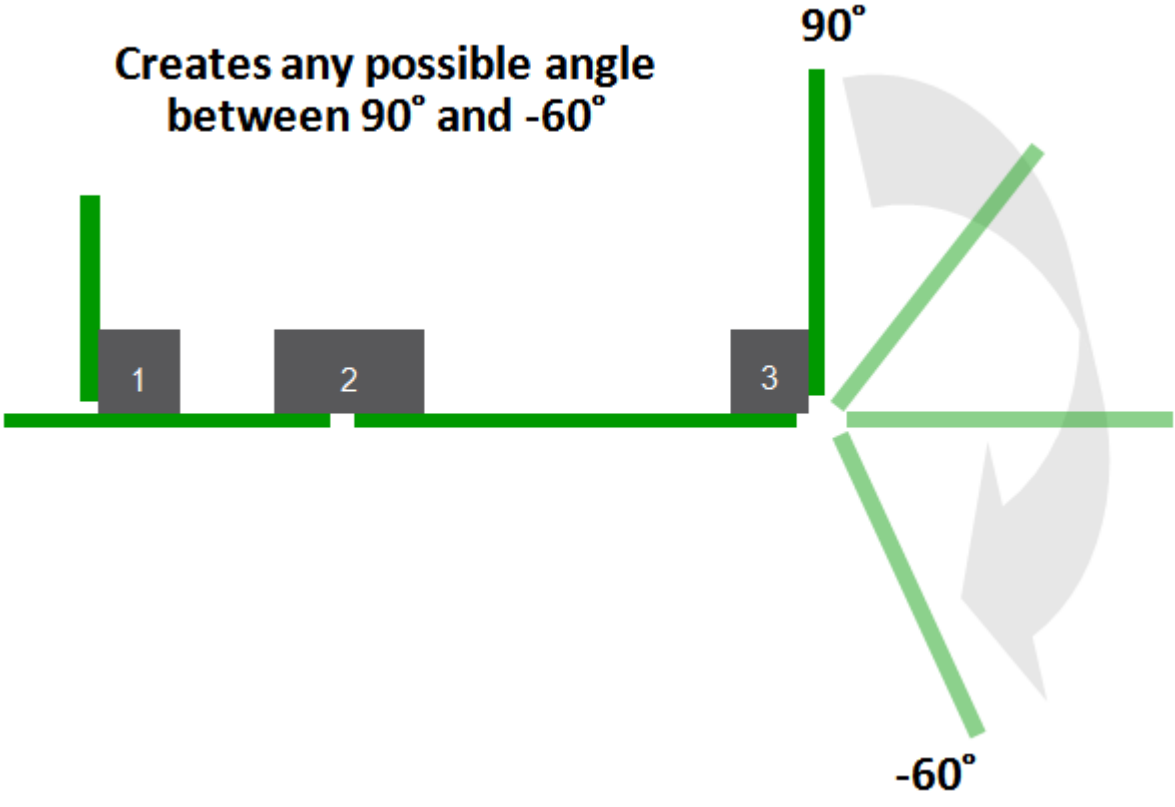

RotaMax™ Product design

Proven Connections
Innovative Solutions

Single module (2 and 4 pos.)

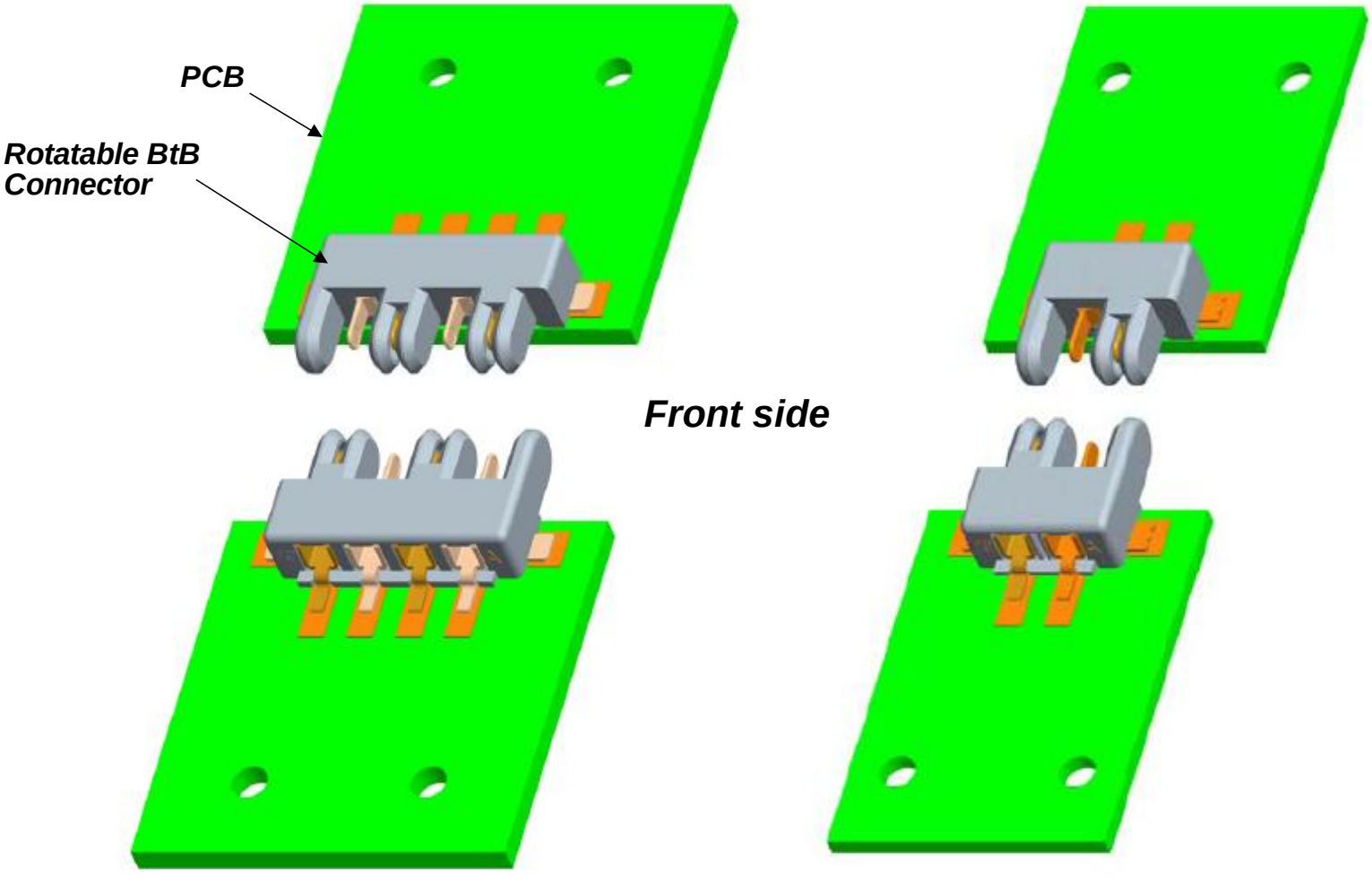

RotaMax™ Product design

Proven Connections
Innovative Solutions

Horizontal View (4 positions)

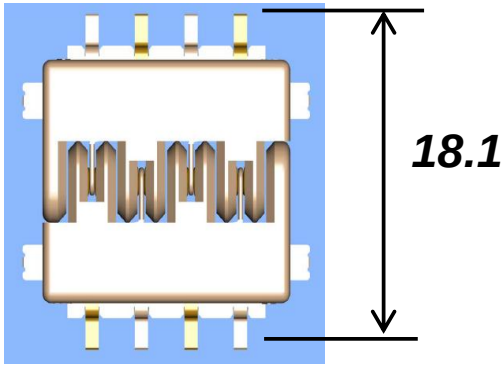

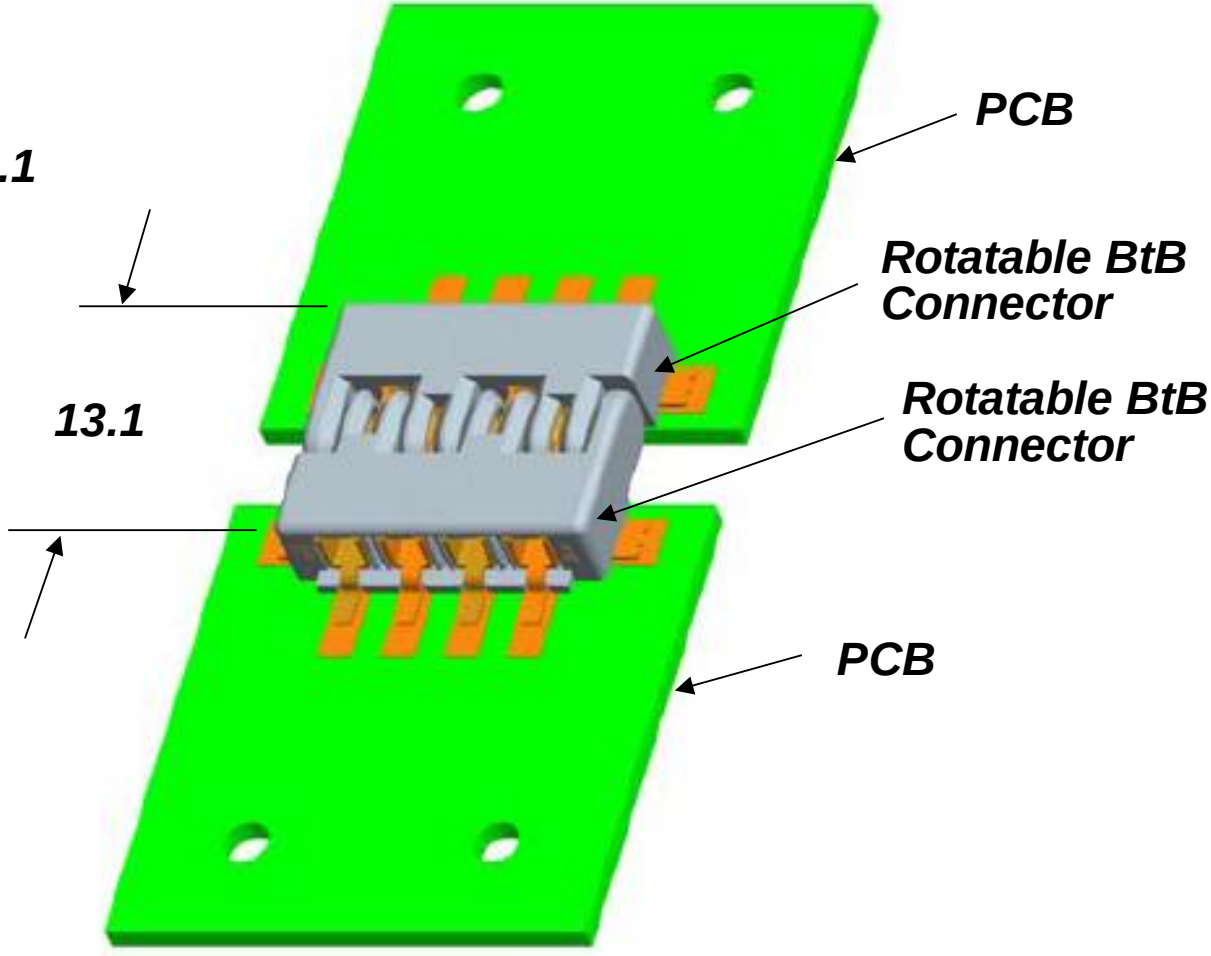

RotaMax™ Product design

Proven Connections
Innovative Solutions

Rotated View

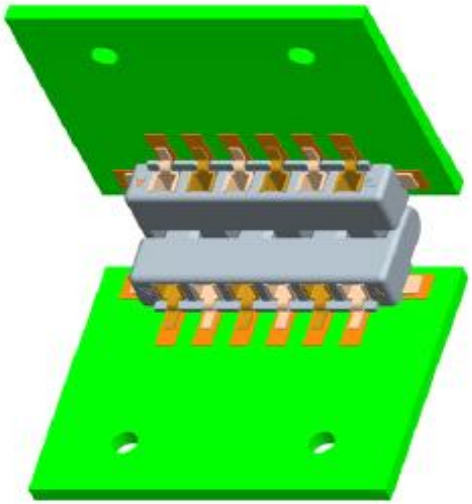

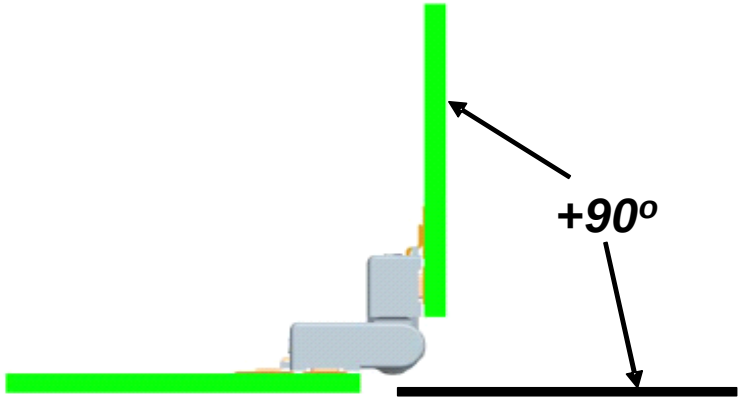

Rotate angle +90º

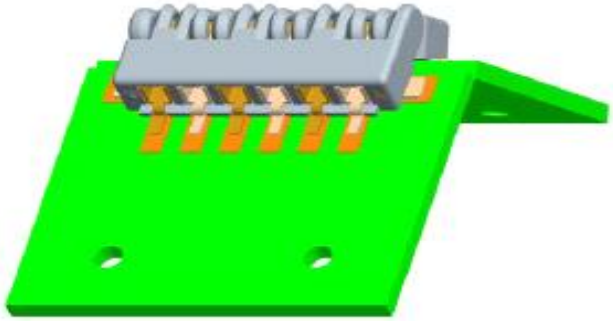

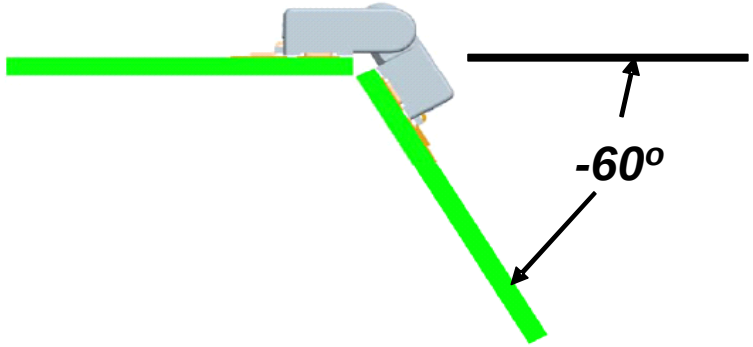

Rotate angle -60º

(PCB T=1.57mm)

RotaMax™ - Specific design consideration

Proven Connections
Innovative Solutions

- Hermaphroditic “mates to itself” design
- Mates under any angle +90° and -60°
- Connector can be paced anywhere on the PCB

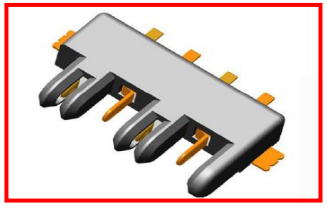

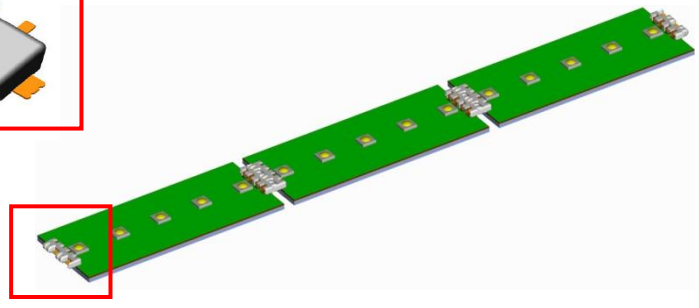

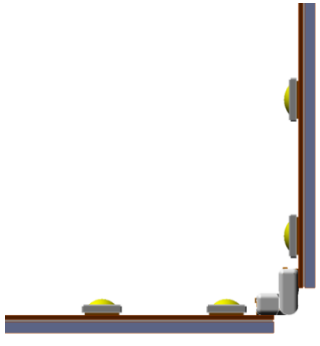

90° Angle

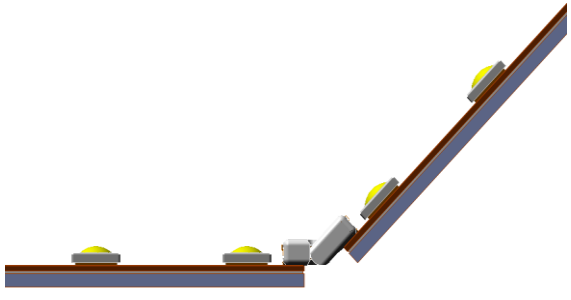

45° Angle

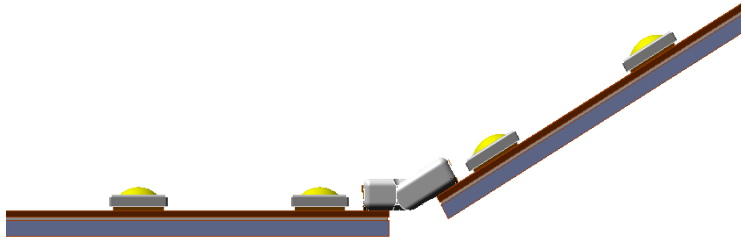

30° Angle

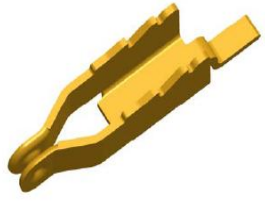

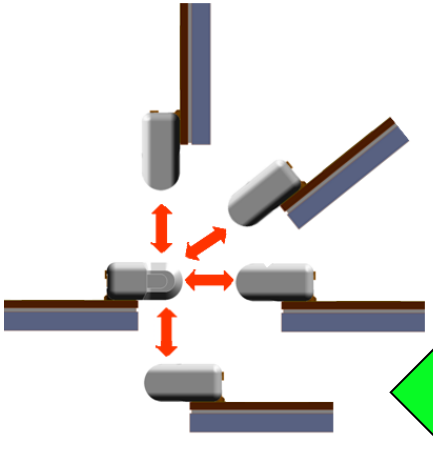

- Reliable dual beam contact

- Supports multiple mating & un-mating directions

RotaMax™ - Specific design consideration

Proven Connections
Innovative Solutions

- Header contact contains a coined hole
- Center of the hole is the intended rotation point
- Receptacle contact will guide itself into the center of the hole
- Increased contact un-mating force

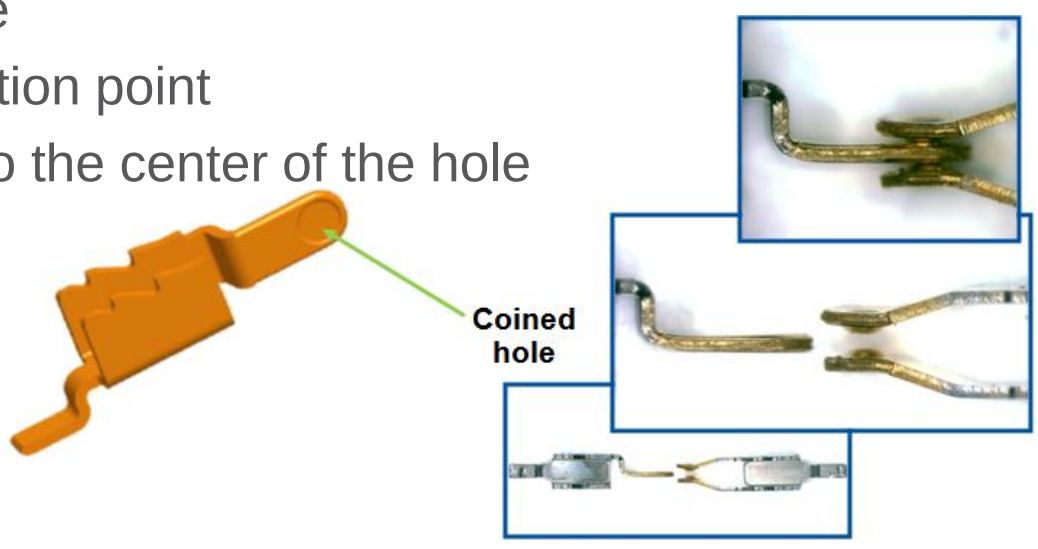

- Passive latch for housing retention
- Pins are protected by housing
- Housing design prevents mis-mating
- Dual beam spring contact system
- Hold down for PCB retention

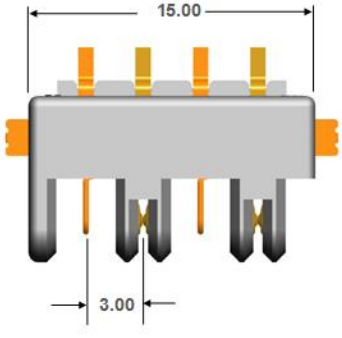

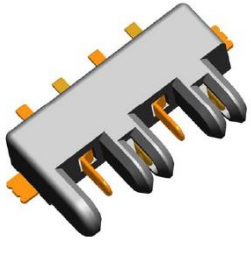

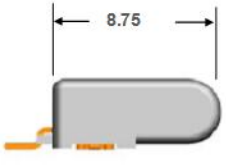

RotaMax™ dimensions

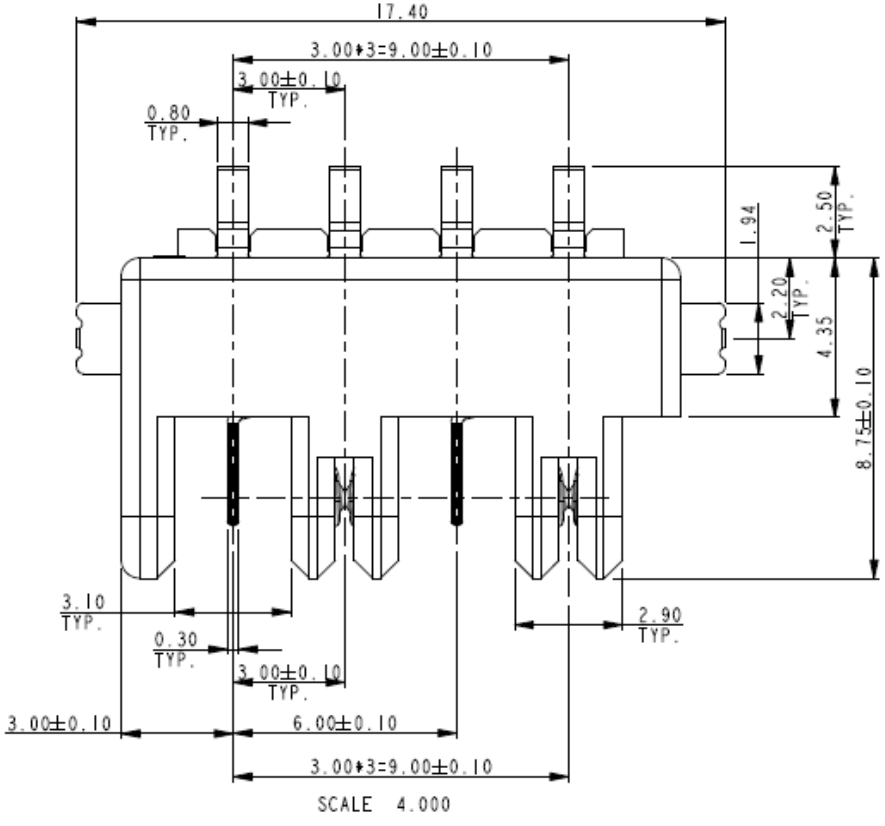

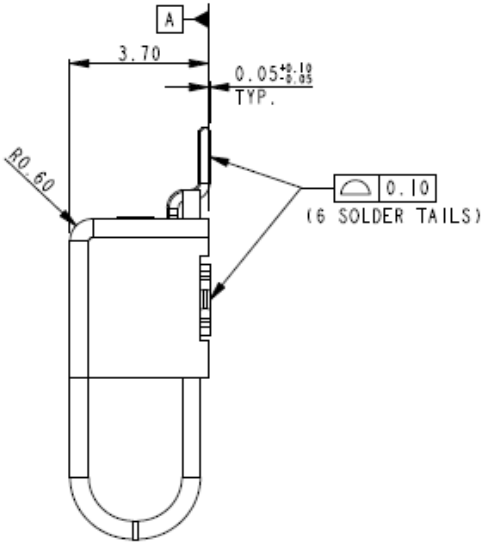

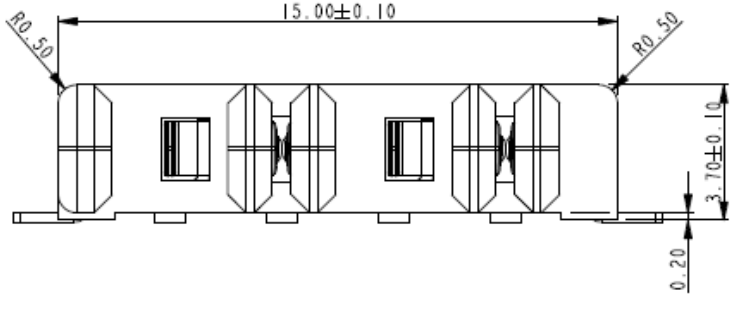

“Standard version ”

RotaMax™ Specifications

Proven Connections
Innovative Solutions

- **Preliminary Specification**
  - Hermaphroditic: mates to itself (1 Part number)
  - Contact System: dual beam spring contact
  - Positions: 2 up to 14 (increments of 2)
  - Pitch: 3.00mm
  - Current rating: up to 5A
  - Operating Temp.: -40˚C up to +105˚C
  - Plating: GXT or Tin over nickel
  - Housing: LCP (UL94V0); color: natural
    GWFI (IEC 60695-2-12): +650˚C
  - Mating cycles: 20
  - Mating angle: all in between 90˚ and - 60˚

- **Working prototypes**: Available as display samples in limited quantity
- **Product Launch**: May 2013 (fully qualified products)

- ***Target Applications****: Control Boards; Sensors; Actuators; Rigid LED Strips; Automotive Electronics; etc.*

Competitive Analysis

Proven Connections
Innovative Solutions

	TYCO Hermaphroditic	TYCO Mini Hermaphroditic	AVX 9159 BtB	FCI's RotaMax™
Pitch	4.00mm	3.00mm	3.00mm	3.00mm
Positions	2, 4, 6	2, 4, 6	2, 3, 4, 5, 6	2, 4, 6, 8, 10, 12, 14
4# mated dimensions H x L x D(mm)	3.9 x 15.9 x 19.8	2.3 x 13.0 x 10.8	3.0 x 14.0 x 6.0	3.7x 15.0 x 13.1
Durability	10 cycles	10 cycles	10 cycles	20 cycles
Current rating per contact	5 A	3 A	5 A	5 A
Operating Voltage	125V AC	125V AC	125 V AC	125 V AC
Operating Temp	-40°C to 105°C	-40°C to 105°C	-40°C to 125°C	-40°C to +125°C
BtB Connections	90° or 180°	180°	180° or 90° (special)	-60° up to +90°
Plating	Tin over Nickel	Tin over Nickel	Gold over Nickel	GXT over Nickel
Contact system	Hermaphroditic, dual beam	Hermaphroditic, dual beam	Blade on beam, plug + socket	Hermaphroditic, dual beam
Guiding, Polarization	no	no	Guiding	Guiding and polarization
Pins protected during mating	no	no	yes	Yes
Housing material	LCP (UL 94V0)	LCP (UL 94V0)	Nylon 46 (UL 94V0)	LCP (UL 94V0)
Floating allowance	no	no	no	Y + Z direction (special)
Price/line 4pos. / 50Kpcs	$ 0.06	$ 0.05	$ 0.06	$ 0.07
Accessories	Dust cap; Cable Connector	Dust cap	Latch; Cable Connector	Optional Pegs
PCB support	no	no	2 solder tabs	2 solder tabs

Differentiators

FCI's RotaMax™

Proven Connections
Innovative Solutions

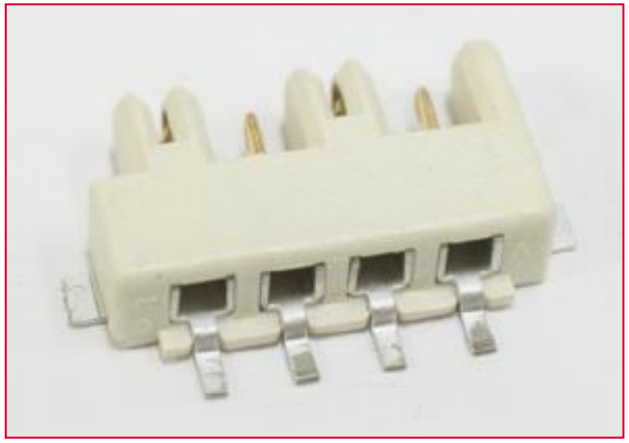

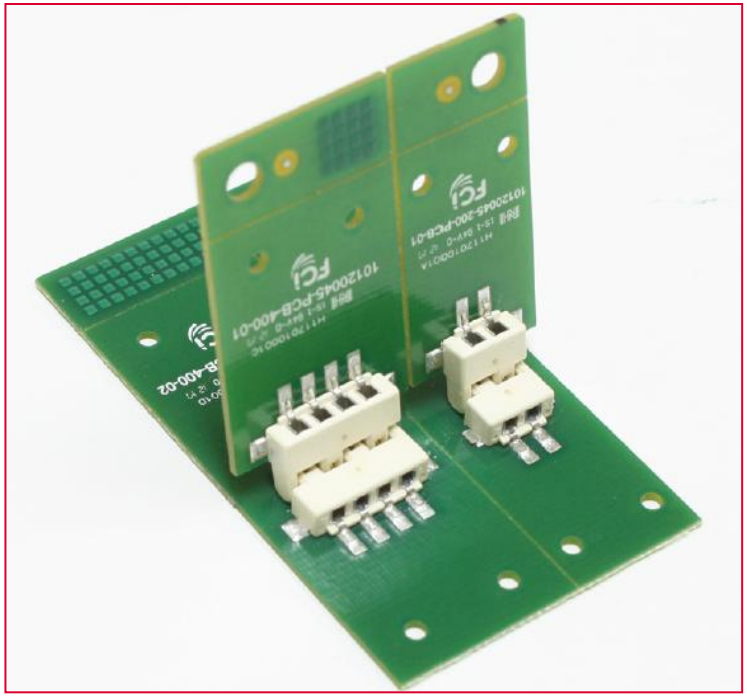

- NOT just another "LED connector"….
- UNIQUE concept
  - Mating angles
  - Angled connections
  - Floating allowance
  - Protected pins
- For DEMANDING applications