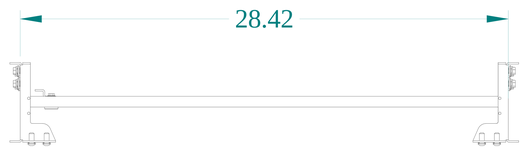

TOP VIEW

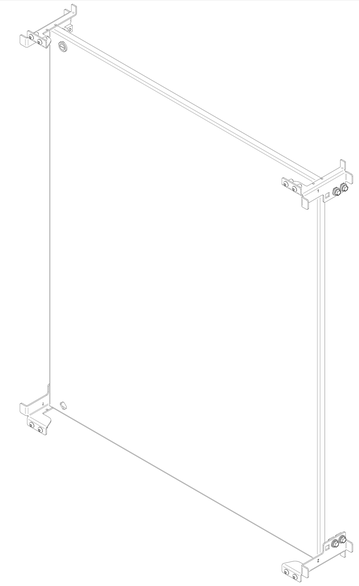

ISOMETRIC VIEWS

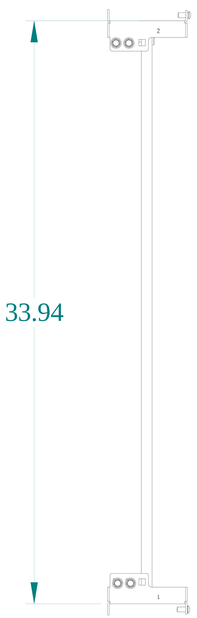

SIDE VIEW

FRONT VIEW

SIDE VIEW

BACK VIEW

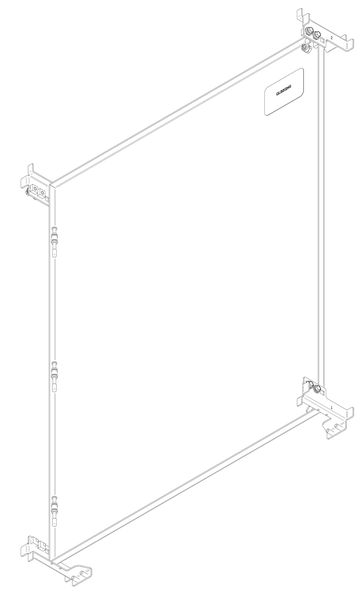

BOTTOM VIEW

HAMMOND MANUFACTURING®

www.hammondmfg.com

Data subject to change without notice.

Part # : ESP3630	Date : Jan 19, 2023

Link:www.hammfg.com/ESP3630