SPECIFICATIONS

Model Number: MA2B3
Part Number: 031842 SPEC Number: 26013942A

December 10,2012

Mechanical Drawing:

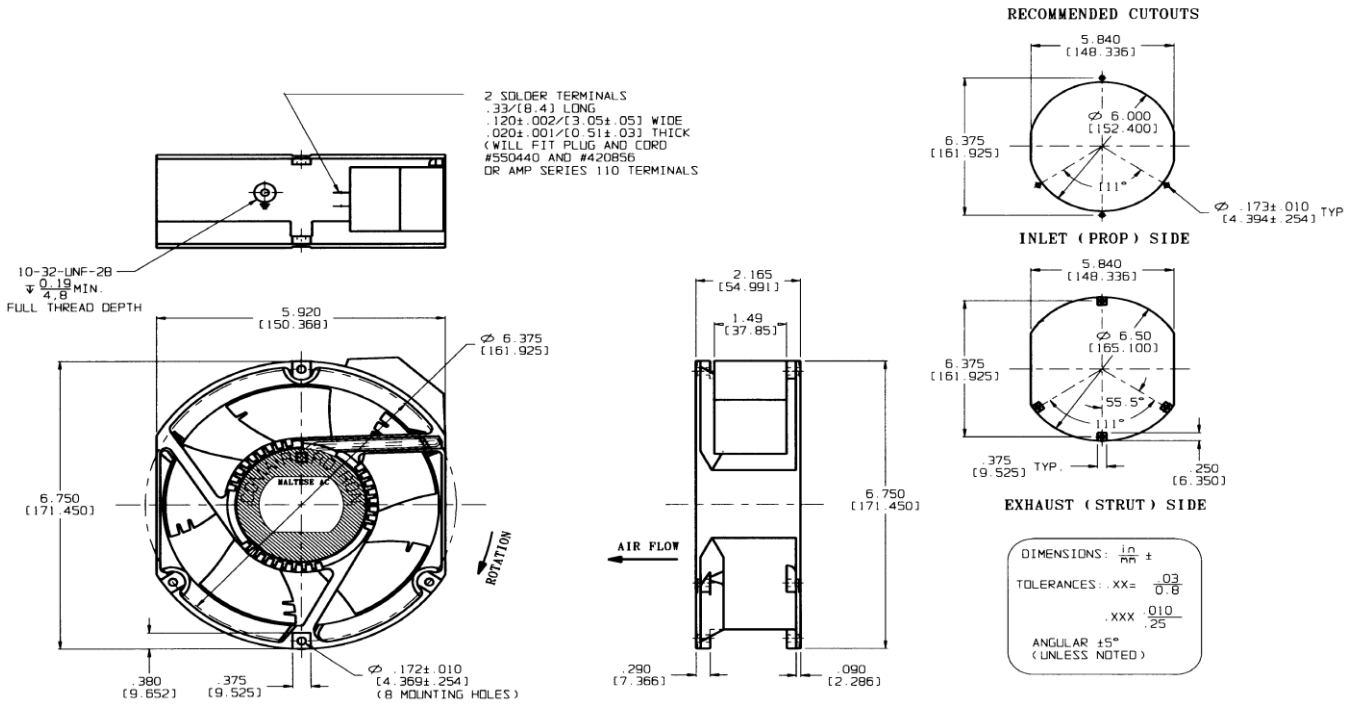

Motor:

Nominal Voltage	= 115 VAC
Frequency	= 50 / 60 Hz
Nominal Running Current	= 0.330/ 0.360 Amps
Max. Locked Rotor Current	= 0.750 Amps
Running Power	= 40.5 / 41.4 Watts
Average Speed	= 2850 / 3400 RPM
Bearings	= Ball
Air Flow	= 250 / 300 CFM
Acoustic:	= 54 / 59 dBA

Construction:
Venturi: Single Piece Die cast Aluminum, Black
Propeller: Plastic, Black, UL 94V-0

Life Expectancy:
This fan is designed for continuous duty life of 53,000 hours at 40°C.

Additional Features:
Permanent Split Capacitor Motor
Automatic Restart Capability
Automatic Reset Thermal Protector

Operating Temperature:	-10°C to 70°C
Storage Temperature:	-40°C to 85°C

Termination:
0.110” Terminals

Agency Approvals:
UL,CUL,CE