THIS DRAWING IS UNPUBLISHED. RELEASED FOR PUBLICATION -,- .
© COPYRIGHT - BY TYCO ELECTRONICS CORPORATION. ALL RIGHTS RESERVED.

LOC	DIST
J	—

REVISIONS 変更

P	LTR	DESCRIPTION	DATE	DWN	APVD
	C2	REVISED ECR-07-000609	10JAN07	MS	KB

-1: AS SHOWN
本図

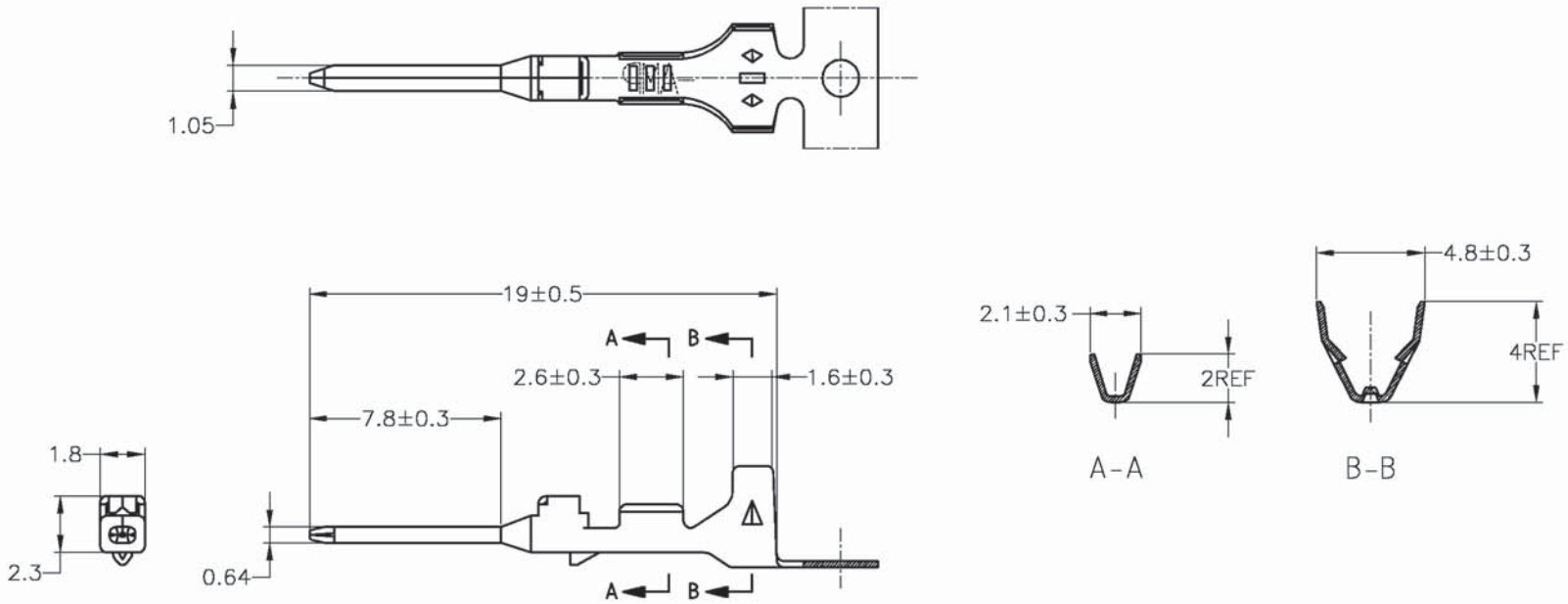

1. 相手側端子型番：173681
2. バラ状端子型番：175063

1. MATING RECEPTACLE NUMBER; 173681
2. LOOSE PIECE NUMBER: 175063

THIS DRAWING IS A CONTROLLED DOCUMENT.

TOLERANCE UNLESS OTHERWISE SPECIFIED: 一般公差

0<x≤ 10	±0.2
10<x≤ 30	±0.25
30<x≤100	±0.3
ANGLE ; 角度	±3°

DIMENSIONS: 単位：耗 mm

TOLERANCES UNLESS OTHERWISE SPECIFIED: 一般公差

0 PLC	±-
1 PLC	±-
2 PLC	±-
3 PLC	±-
4 PLC	±-
ANGLES	±-

MATERIAL 材料: BRASS THICKNESS 黄銅、板厚：0.25

FINISH 仕上: PRE-TINNED 錫めっき済

DWN M.SUGAWARA 10JAN07
CHK K.BETSUI 10JAN07
APVD K.BETSUI 10JAN07

PRODUCT SPEC 製品規格 —

APPLICATION SPEC 取付適用規格 114-5108

WEIGHT 0.22g

CUSTOMER DRAWING

Tyco Electronics AMP K.K.
Kawasaki, Japan

NAME 名称: 040 SERIES TAB CONTACT

SIZE	CAGE CODE	DRAWING NO 番号	RESTRICTED TO
A3	00779	C-173682	—

SCALE 尺度 5:1 SHEET 1 OF 1 REV C2

AMP 1470-19 REV 31MAR2000